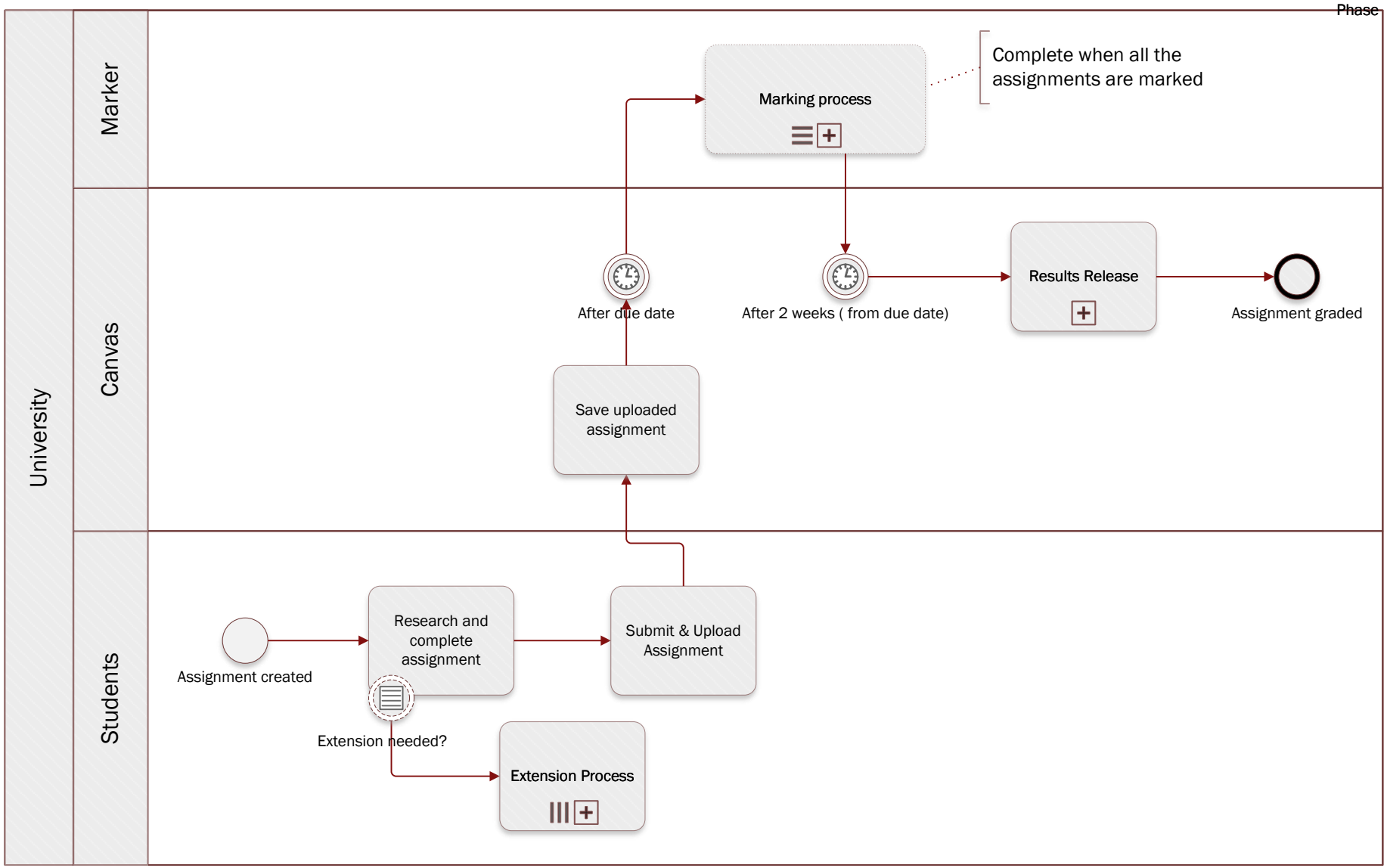
Phase
University
Marker
Canvas
Students
Marking process
Complete when all the assignments are marked
After due date
After 2 weeks (from due date)
Results Release
Assignment graded
Save uploaded assignment
Assignment created
Research and complete assignment
Submit & Upload Assignment
Extension needed?
Extension Process

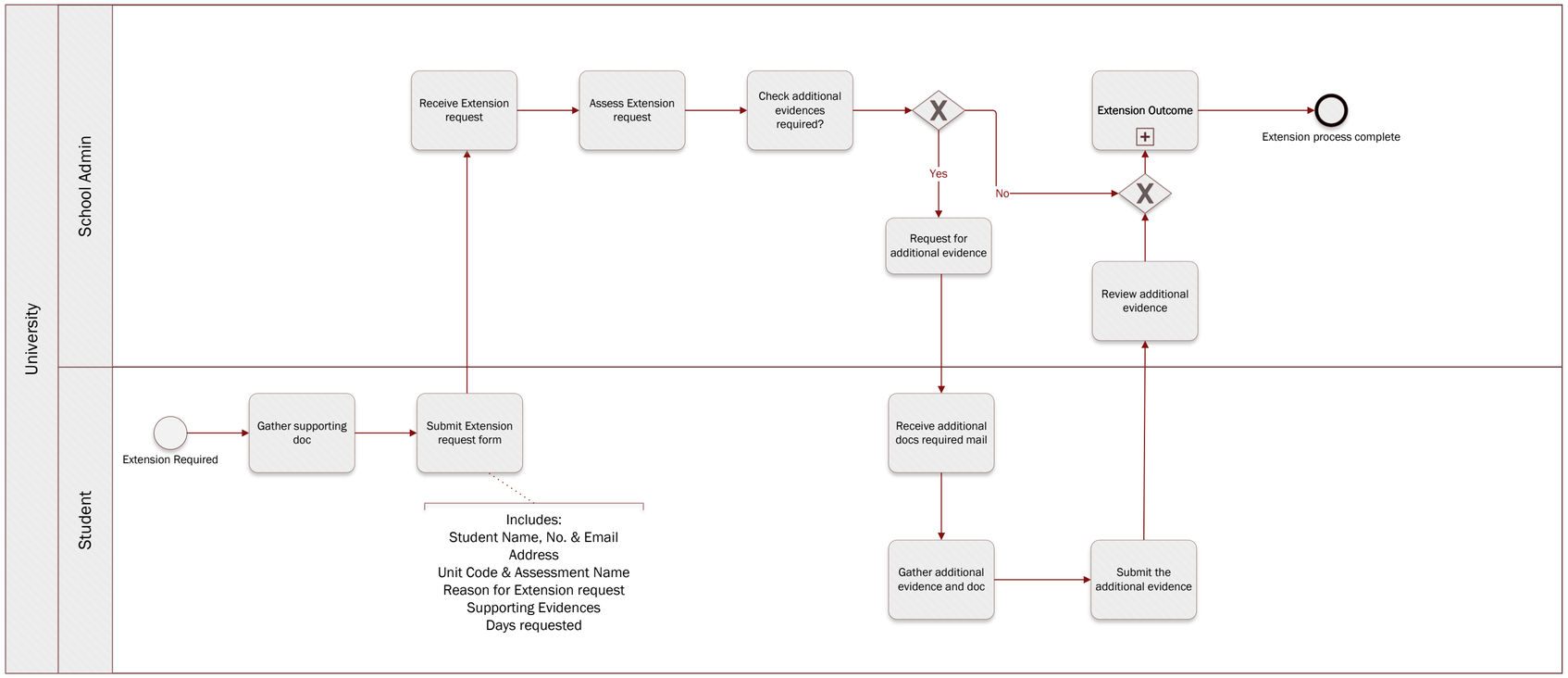
University
School Admin
Student
Receive Extension request
Assess Extension request
Check additional evidences required?
Yes
No
Request for additional evidence
Extension Outcome
Extension process complete
Review additional evidence
Extension Required
Gather supporting doc
Submit Extension request form
Includes:
Student Name, No. & Email Address
Unit Code & Assessment Name
Reason for Extension request
Supporting Evidences
Days requested
Receive additional docs required mail
Gather additional evidence and doc
Submit the additional evidence

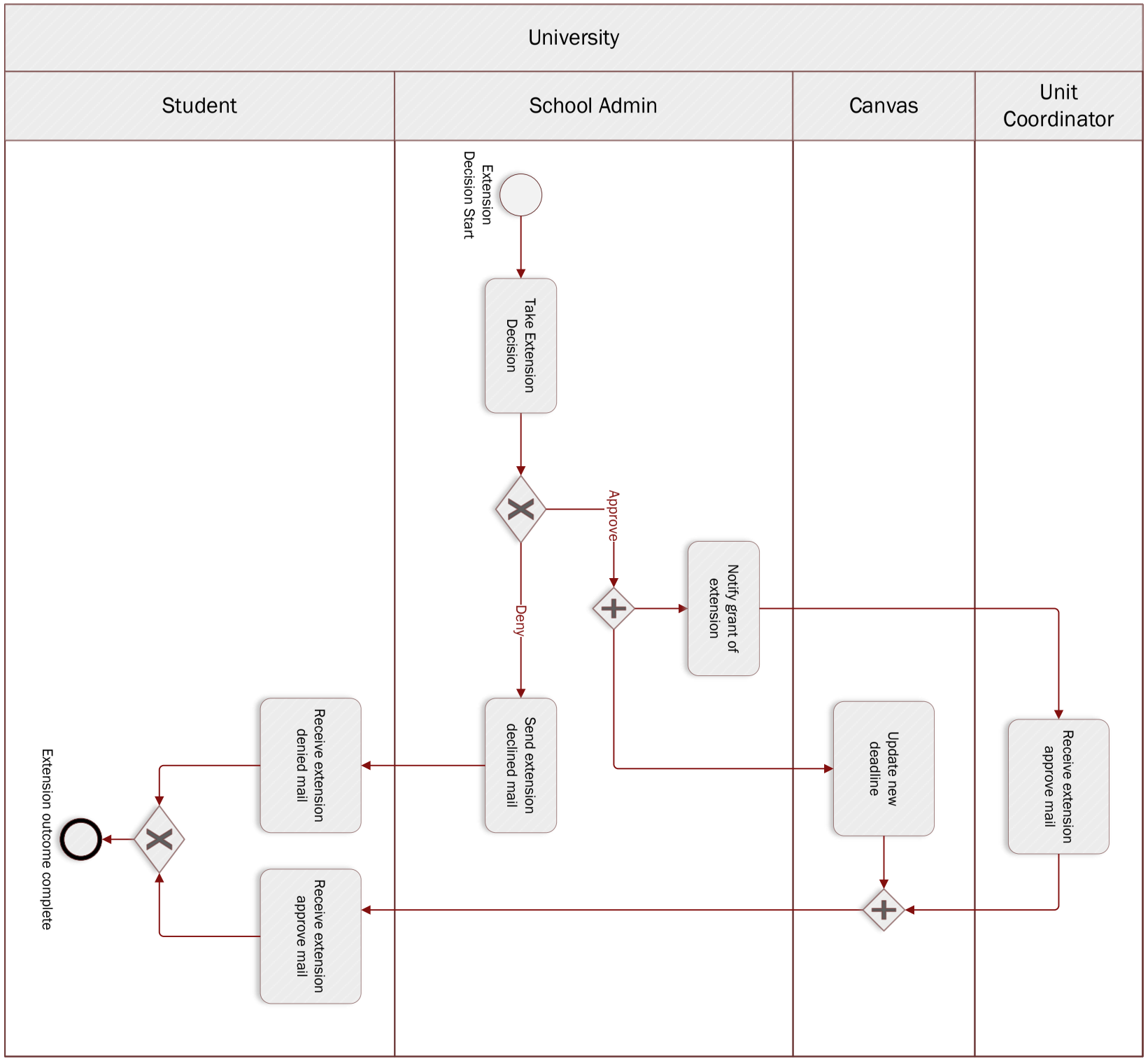
University
Student
School Admin
Canvas
Unit Coordinator
Extension Decision Start
Take Extension Decision
Approve
Deny
Notify grant of extension
Send extension declined mail
Receive extension approve mail
Update new deadline
Receive extension denied mail
Receive extension approve mail
Extension outcome complete

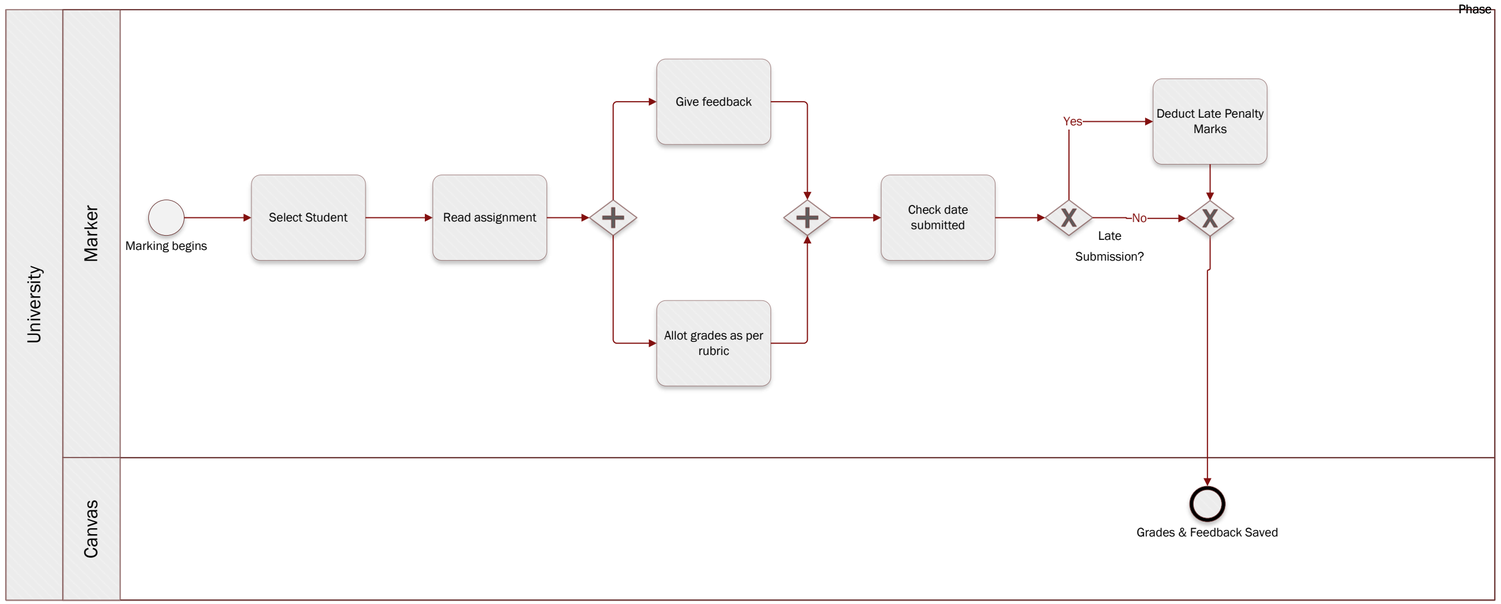
Phase
University
Marker
Canvas
Marking begins
Select Student
Read assignment
Give feedback
Allot grades as per rubric
Check date submitted
Late Submission?
Yes
No
Deduct Late Penalty Marks
Grades & Feedback Saved

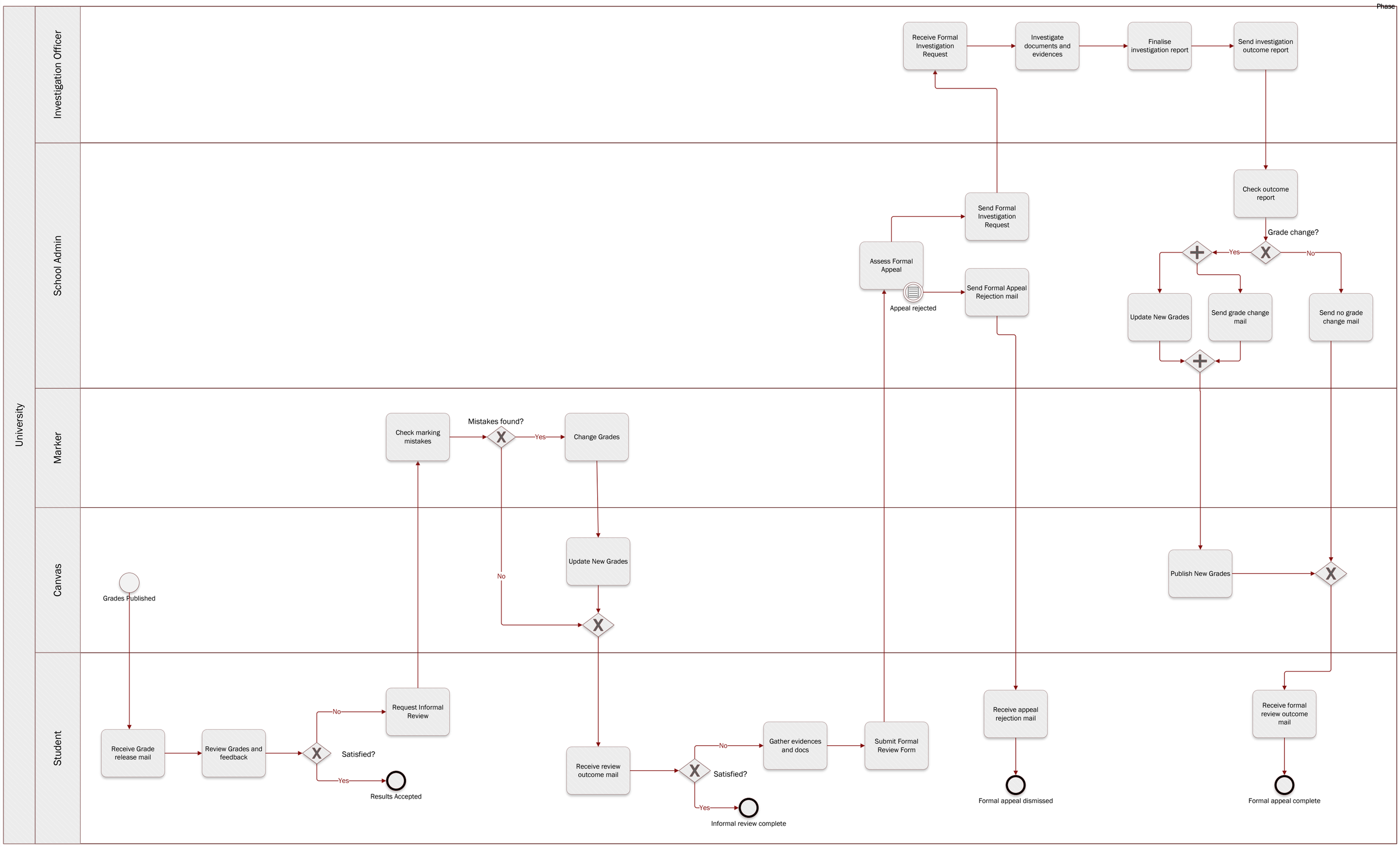
Phase
University
Investigation Officer
School Admin
Marker
Canvas
Student
Receive Formal Investigation Request
Investigate documents and evidences
Finalise investigation report
Send investigation outcome report
Check outcome report
Grade change?
Yes
No
Update New Grades
Send grade change mail
Send no grade change mail
Send Formal Investigation Request
Assess Formal Appeal
Appeal rejected
Send Formal Appeal Rejection mail
Check marking mistakes
Mistakes found?
Yes
Change Grades
No
Update New Grades
Publish New Grades
Grades Published
Receive Grade release mail
Review Grades and feedback
Satisfied?
No
Request Informal Review
Yes
Results Accepted
Receive review outcome mail
Satisfied?
No
Gather evidences and docs
Submit Formal Review Form
Yes
Informal review complete
Receive appeal rejection mail
Formal appeal dismissed
Receive formal review outcome mail
Formal appeal complete